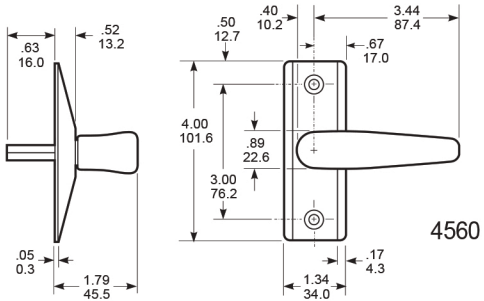

4560

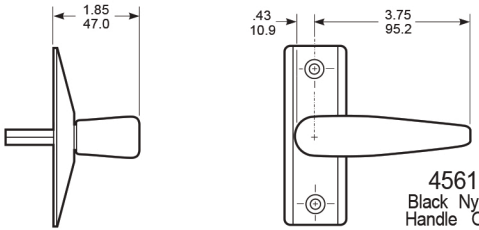

4561
Black Nylon
Handle Only

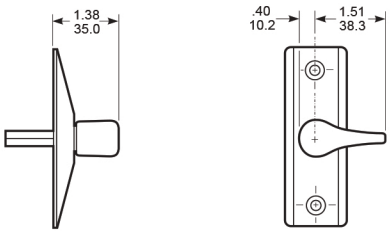

4565

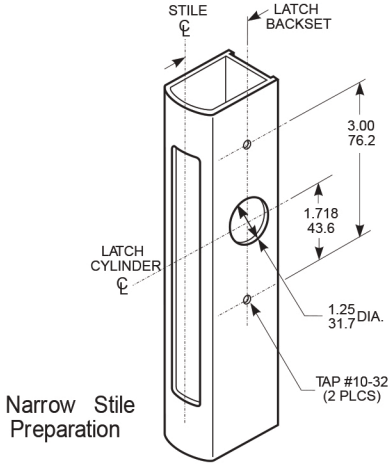

Narrow Stile
Preparation

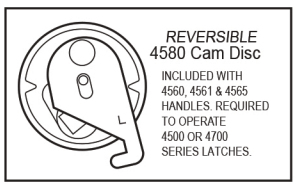

REVERSIBLE
4580 Cam Disc

INCLUDED WITH 4560, 4561 & 4565 HANDLES. REQUIRED TO OPERATE 4500 OR 4700 SERIES LATCHES.

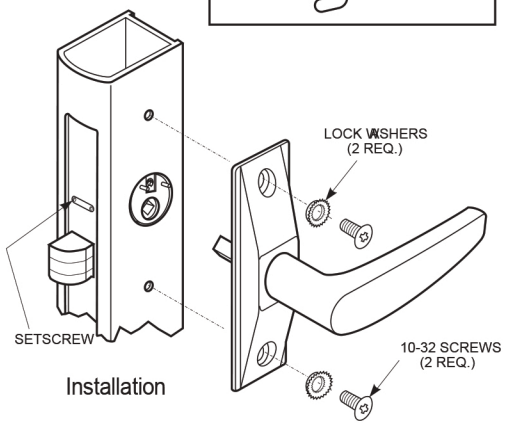

Installation

ADAMS RITE MANUFACTURING CO.
260 Santa Fe Street, Pomona, CA 91767
Phone: (909) 632-2300 Fax: (909) 632-2369

4560, 61, 65 - Eurostyle Deadlatch Handles for 4500/4700